Linear Motion with Pneumatics Lecture and Workshop

Team 1403
Cougar Robotics
a FIRST® RoboticsTeam

Warren Venema

Mentor/Alumni FRC 1403
Mechanical Engineer
Picatinny Arsenal, NJ

What will be covered:

- Types of Linear Motion devices
- Pistons
  - General overview of operation
  - Key components of a pneumatic system
  - 1403’s standard operations

So what’s linear motion and why is it important?

What if you need to….

… Manipulate an arm up and down?
… Manipulate a game piece?
… Load something by pushing it?
… Lift your entire robot?
To name a few!

Linear Motion

Electrically Driven

Linear Actuators

Linear Rack and Pinion

Multi-bar Linkage Systems

Non Electrically Driven

Pneumatic Pistons

Hydraulic Pistons

Electrically Driven Systems

- Linear Actuators
  - Uses a motor and a screw to drive up the system
  - Can be rather expensive
- Linear Rack and Pinion
  - Can slip if not properly designed
  - The wiring can be difficult in some situations

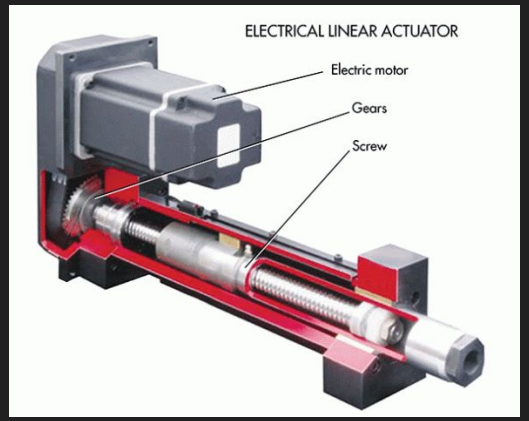

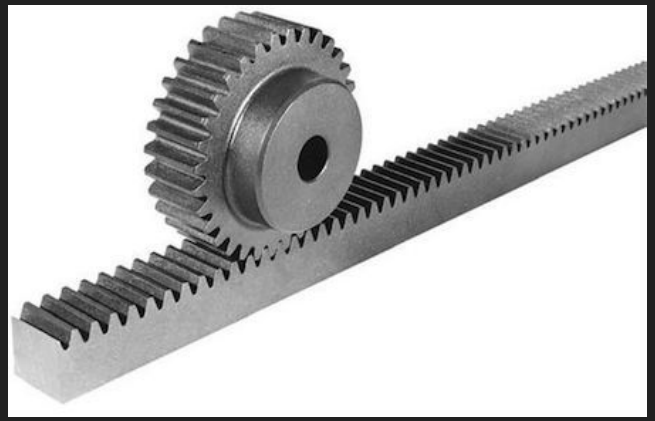

Electrically Driven Systems

- Multi-bar Linkage Systems
  - There are many, many different applications of these
  - Effective for specific applications, but can be difficult

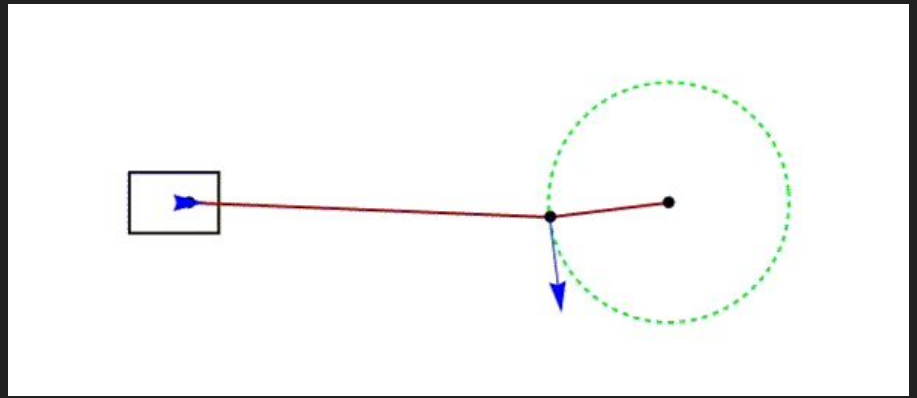

Pistons

“Non Electrically” Driven Systems

- Generally still need a form of electrical input within the system
  - Motors, Compressors, Solenoids
- Use a working fluid to drive a piston head

Split into two different groups

- Pneumatics
  - Air Pressure
- Hydraulics
  - Liquid Pressure

Primary Function of a piston

Exhaust air is vented

Pressurized air enters port, exerting a force on the piston (psi- pounds per square inch)

Work is done by the shaft connected to the piston

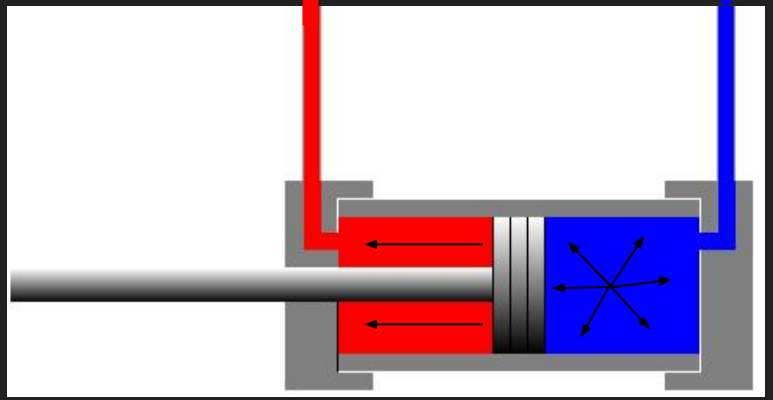

How much force will be applied?

Force = air pressure (psi) * piston area (in^2)
= (lb/in^2) * in^2 = lbf

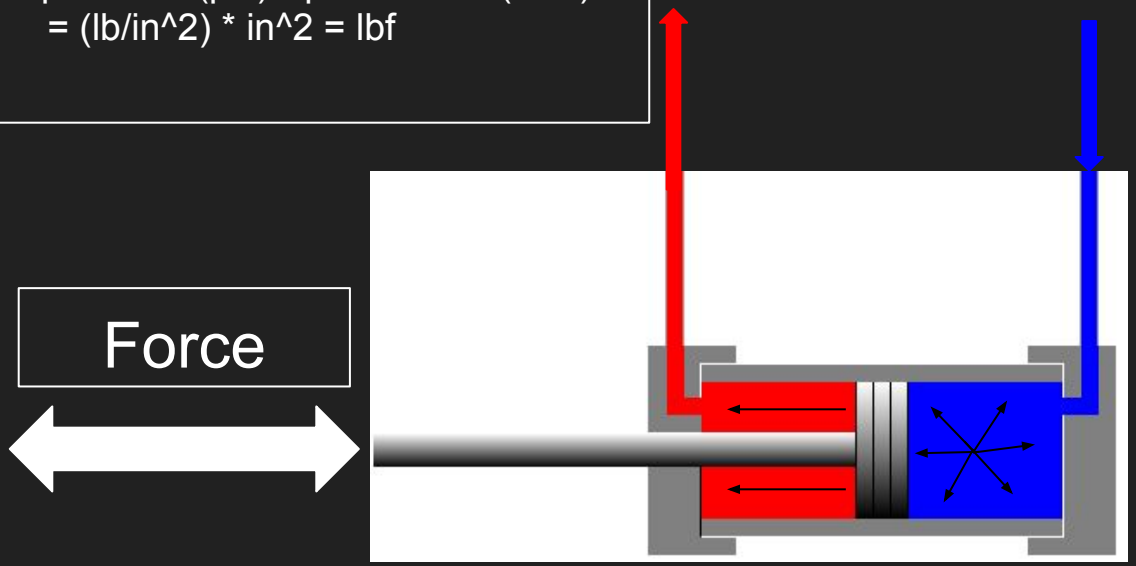

Where do I get these measurements?

$Area_1 = A_{Piston\ head} - A_{Output\ Shaft}$

Vs

$Area_2 = A_{Piston\ head}$

Example:
For a 1” Diameter Piston
With a ¼” output shaft

A_1 = (¼ * pi) - (1/64 * pi) = 0.736 in^2

A_2 = (¼ * pi) = 0.785 in^2

Where A = r^2 x pi

Force = Pressure * Area

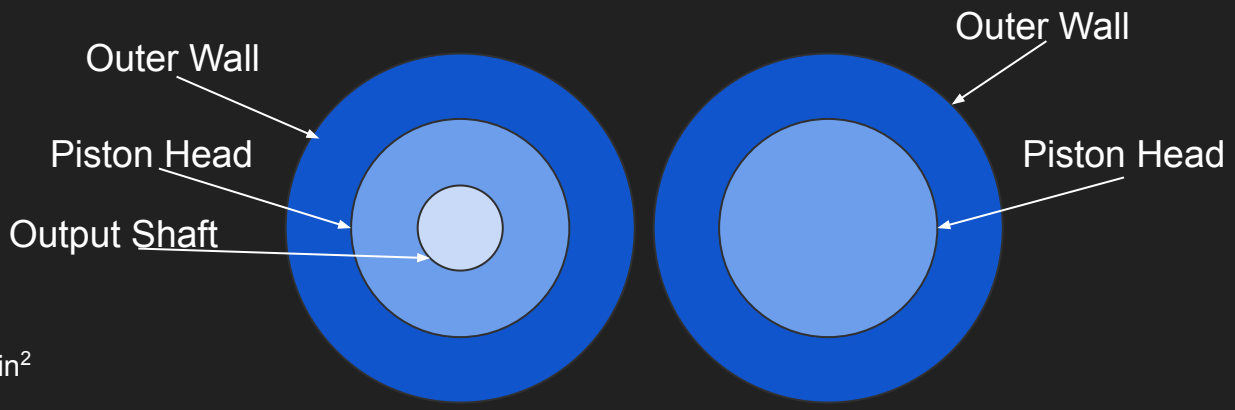

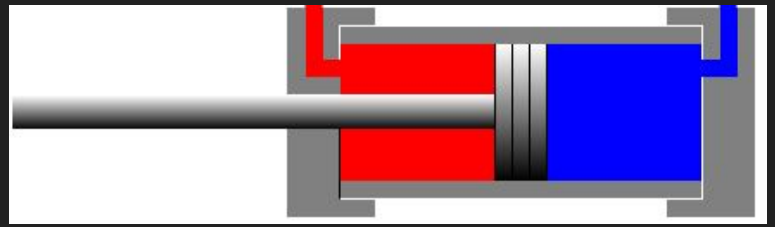

Components

- Compressor
- Storage Tanks
- Pressure Switch
- Solenoid Valve
- Regulator
- Fittings
- PNC (Pneumatics Control Module)
- Relief Valve
- Gauge
- Tubing
- Dump Valve
- Actuator or Cylinder

Compressors Cont.

ViAir 90C (KOP)

Pros: Light, Small and Cheap ($64)
Cons - Underpowered, Runs very hot, long cooldown time

Thomas 215

Pros: Reliable, Continuous Use
Cons - Heavier than ViAir, Costs about twice as much

Thomas 405 (Older)

Pros: Continuous use, durable with good airflow
Cons - Heavy, large footprint, expensive ($250+)

Compressors

- Motorized Pump that compresses air
- 1 can be purchased via FIRST choice
- Comes in rookie's kickoff kit
  - This is the ViAir 90C
- Must use a Pneumatic Control Module to power the compressor

Factors to Consider
- Weight
- Size
- Cost
- Amount of Air required
- Onboard Storage

Storage Tanks

- Tanks that holds reserved compressed air
- Can be purchased from FIRST Choice
- Mounted before pressure regulator
- Must have at least a working pressure of 125 psi
- Must have at least a burst pressure of 250 psi

Factors to Consider
- Weight
- Size
- Cost
- Volume

AndyMark Plastic Tank (2011)

Pros: Light, Cheap ($17), good volume
Cons: Limited size and shapes, Plastic or no thread connections

Clippard Metal Tank

Pros: Durable, multiple shapes and sizes
Cons: Heavier and expensive ($28)

Clippard Plastic Tank

Pros: Light cheap, max volume
Cons: Limited Sizes, Push on connection is fragile

Smaller Components

Pressure Switch

- Turns off the compressor at 115 psi
- Turns on at low pressure (around 95 psi)

Regulators

- Adjusts air pressure to working air pressure of 60 psi or less

Relief Valve

- Safety device that releases air if pressure rises to over 125 psi
- Mounts on the compressor

Central Components

Gauge

- Meter that shows the air pressure in the system at the given time

Dump valve

- Manual release valve used to exhaust air in the system
- MUST be easily accessible

Actuator or Cylinder

- The device that creates mechanical motion with pneumatic input

Types of Pistons

Standard Long Stroke

- Allows for large amount of movement
- Takes more air than some of the smaller types

Pancake Piston

- Small throw but allows for a large amount of force to be applied

Small type Pistons

- Small pistons allow for small quick actions
- Easily mountable space wise as compared to large piston

Some Types of Mounting

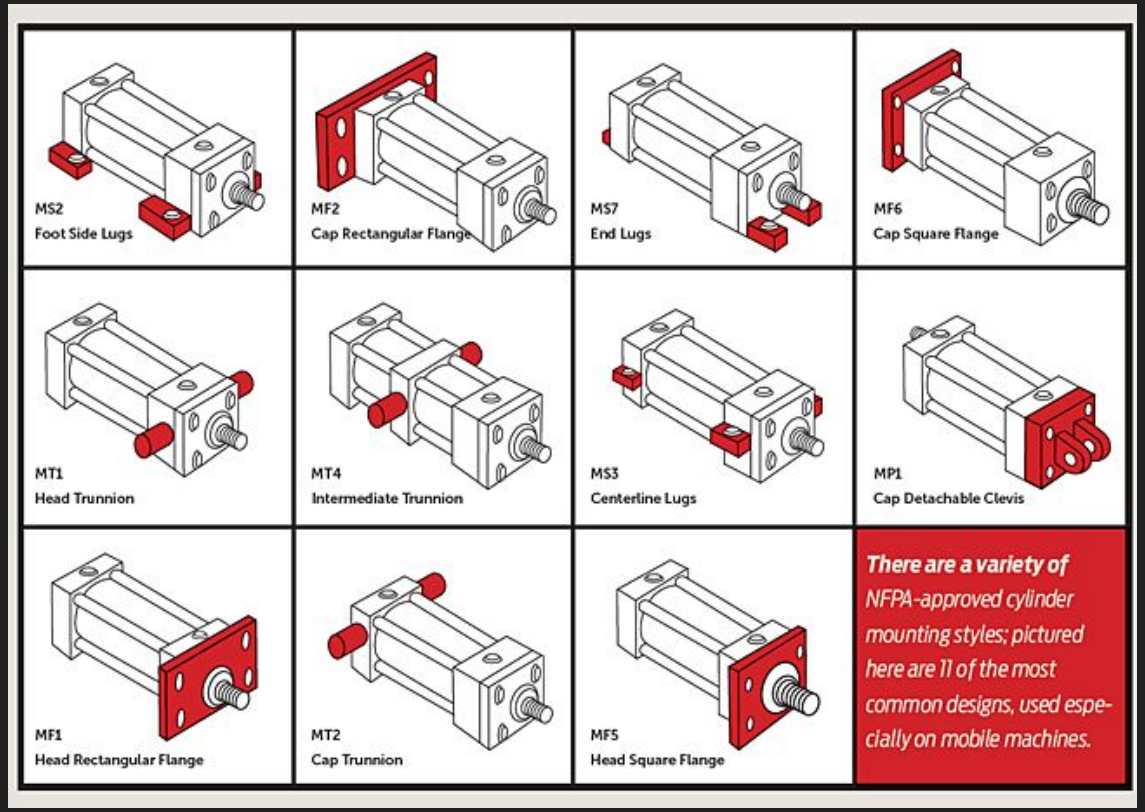

Via: https://www.mobilehydraulictips.com/hydraulic-cylinder-mounting-options/

Smaller Components

Tubing

- Plastic hose that carries pressurized air
- Must have an inner Diameter of 0.16”

Fittings

- Brass or plastic connectors
- Use Teflon tape on threads for air tight seal
- McMaster-Carr Quick Assembly Brass Compression Tubing

Fittings continued

Compressed Fitting

- More Expensive
- Harder to attach when compared to push-on
- Higher PSI capability
- Strong connection

Push-on Fittings

- Easier to install hoses
- Cheaper in most cases
- Less PSI capability
- Can easily have the tube removed

Solenoid Valves

- Valve that is controlled by the robot code
- Diverts air to desired air cylinder
- Controlled by PCM
- Available in single or double valve, and 12 or 24 Volts
- (1) Festo Double Valve included in KOP (24V)

Factors to Consider
- Weight
- Size
- Cost

Double Valve

Single Valve

Pneumatic Manifolds

- Convenient Junction point for multiple pneumatic devices
- Supply air to two or more different pistons

Factors to Consider
- Weight
- Size
- Cost
- Amount of pistons in a system

Pneumatic Control module

- Directly controls and supplies power to compressor, the pressure switch, and can control up to 8 single or 4 double solenoid valves.

Solenoid Valves

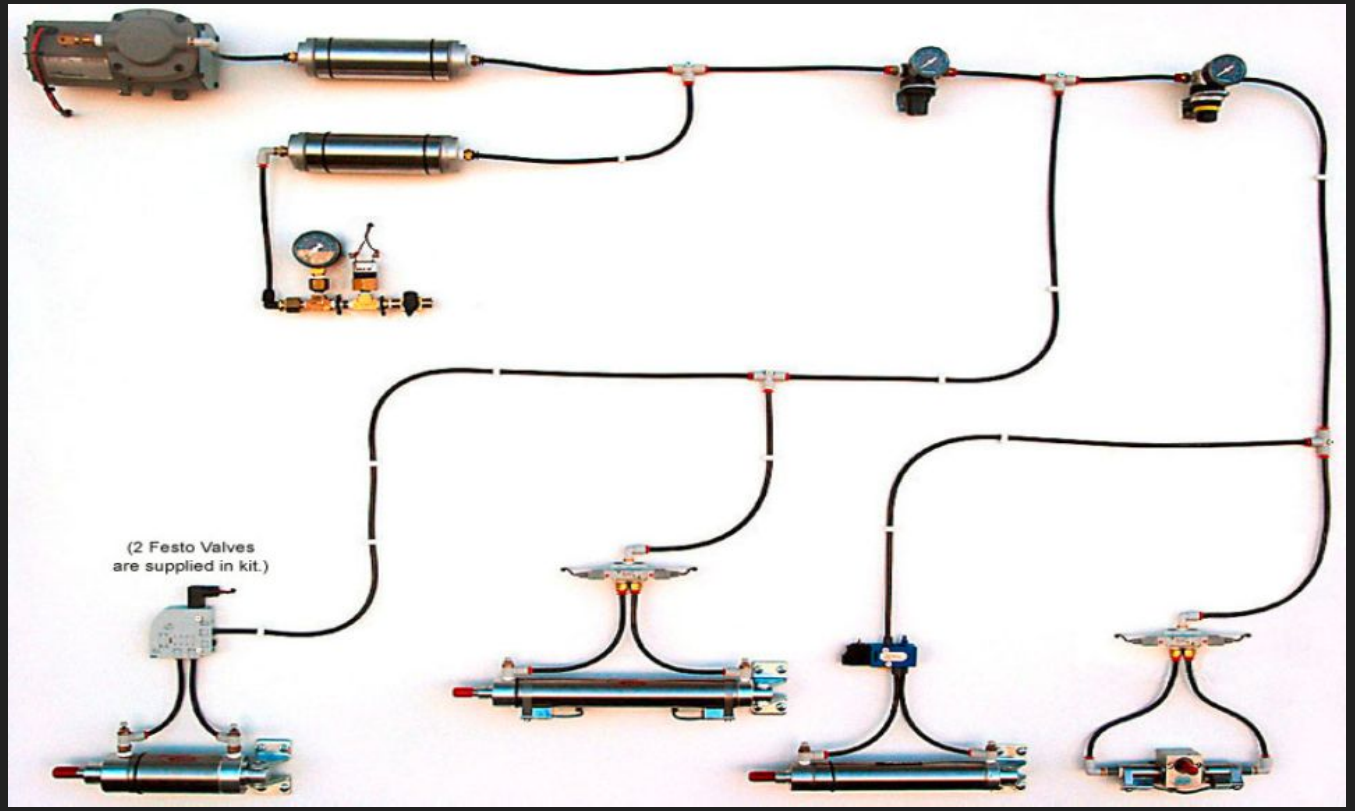

Solenoid Valves

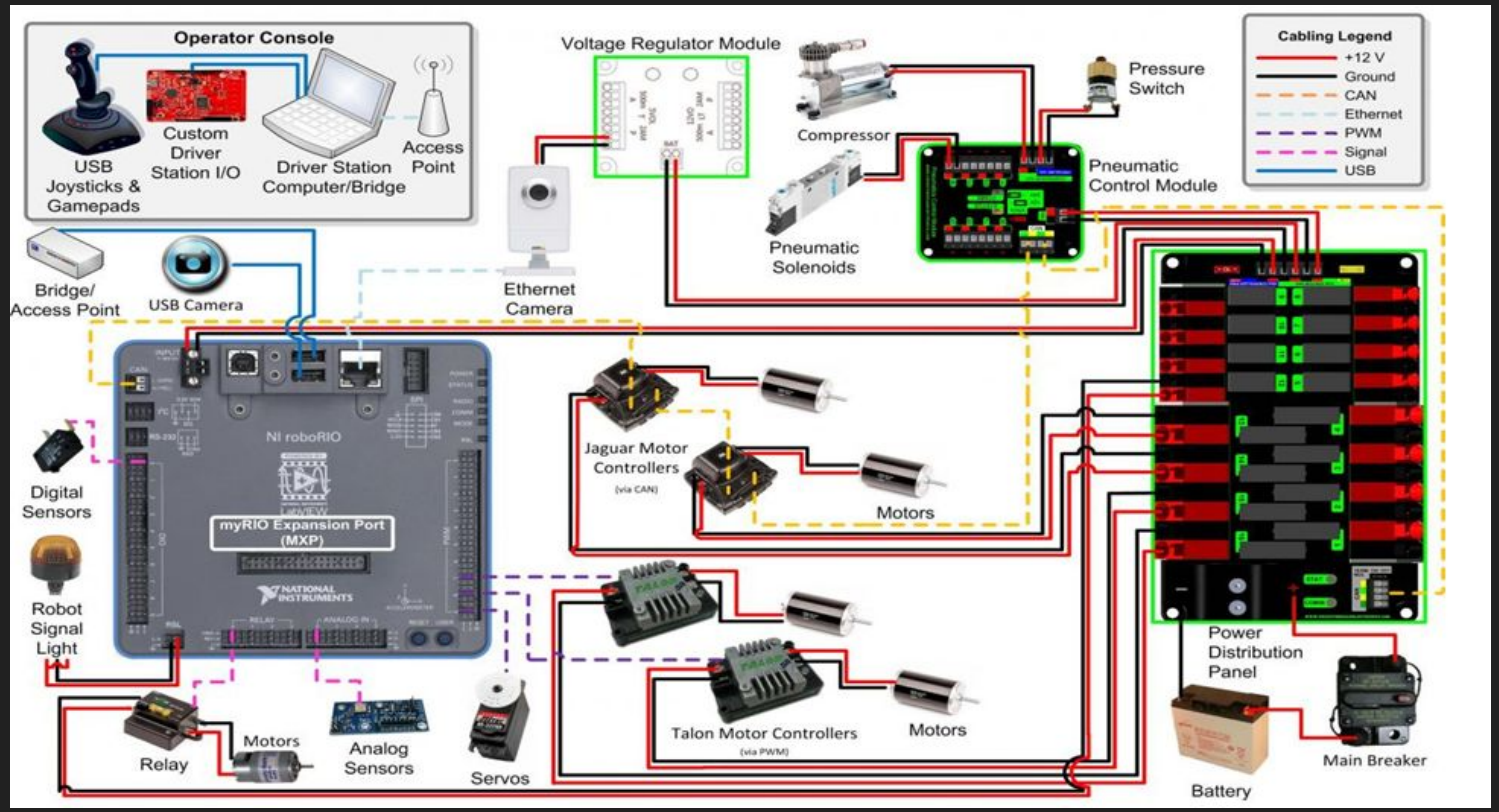

Wiring

After setting up your Robo-RIO and all the related electrical equipment the following instructions will result in a working pneumatic system.

Compressor

Wire the compressor to the Pneumatic Control Module (Power).

Pressure Switch

Connect switch to Pneumatic Control Module (PCM).

Valves

After assembly of the kit valves with the included wire we can now wire the solenoid valve to the PCM.

Solenoids (Double Acting valves only)

Wire both 1 and 2 from both sides of the valve to the ports of the PCM.

Control Board

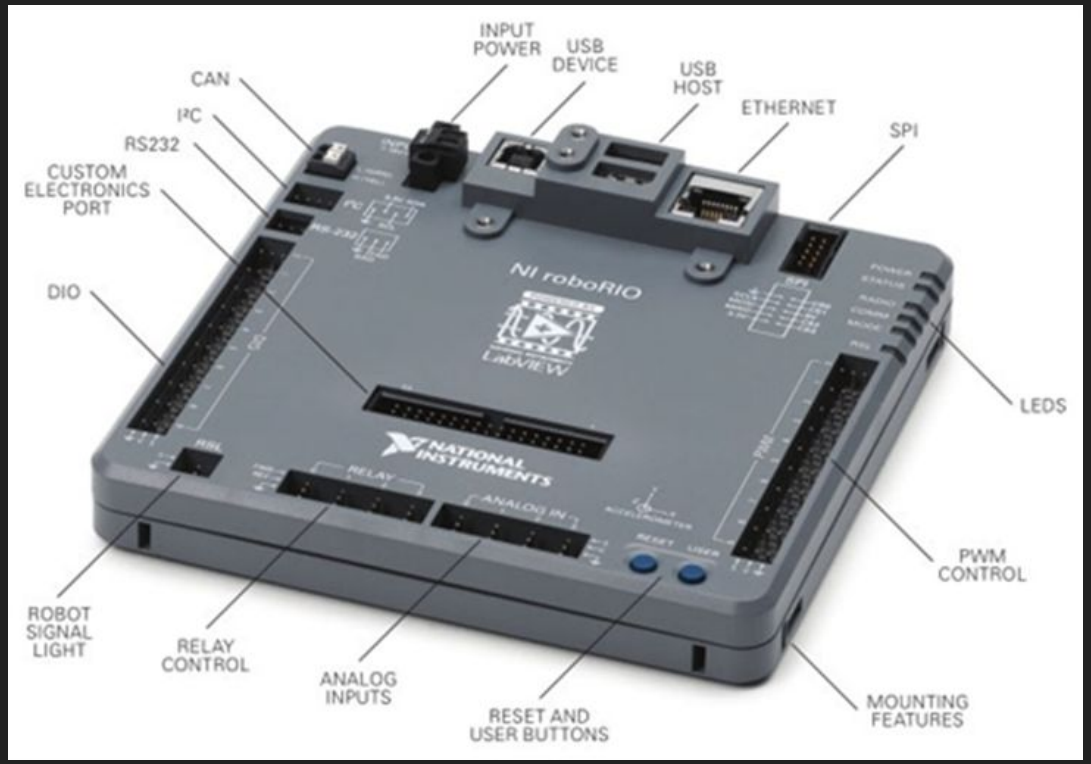

Some Scenarios

- Moving an arm outside of your robot frame
- Moving a game piece from the floor to 5ft up
- Loading a game piece into a firing mechanism
- Climbing up a fancy tube pyramid
- Lifting your robot onto a platform (wheels vs lift)

This Past Season (2018/2019)

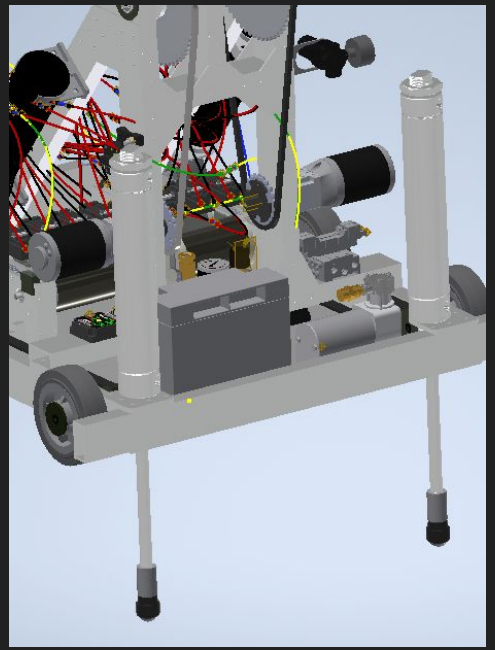

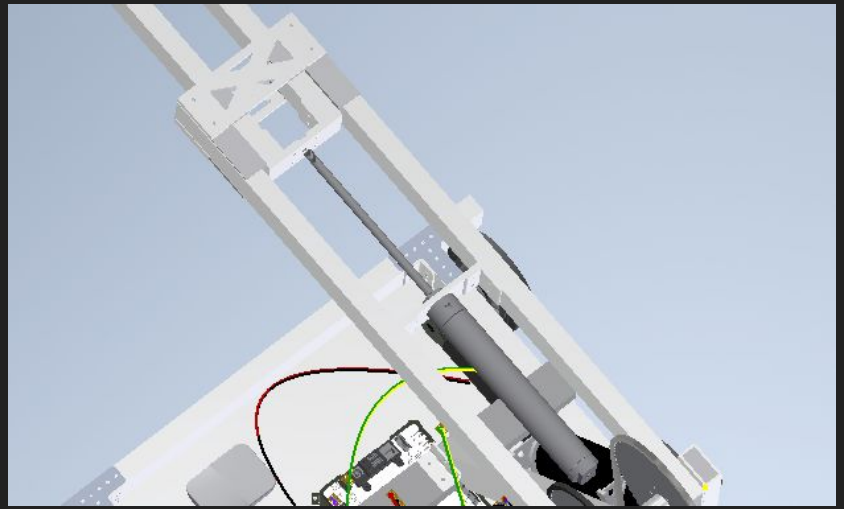

Resources/Links

AndyMark:
www.Andymark.com
VexPro
www.vexrobotics.com/vexpro
Chief Delphi
www.chiefdelphi.com
First Robotics
www.usfirst.org
Cougar Robotics Team 1403
www.cougarrobotics.com
The Pneumatic Handbook can be found:
https://firstfrc.blob.core.windows.net/frc2017/pneumatics-manual.pdf

Linear Motion with Pneumatics Lecture and Workshop

Warren Venema
Mechanical Engineer
Picatinny Arsenal, NJ

Team 1403
Cougar Robotics
a FIRST® RoboticsTeam